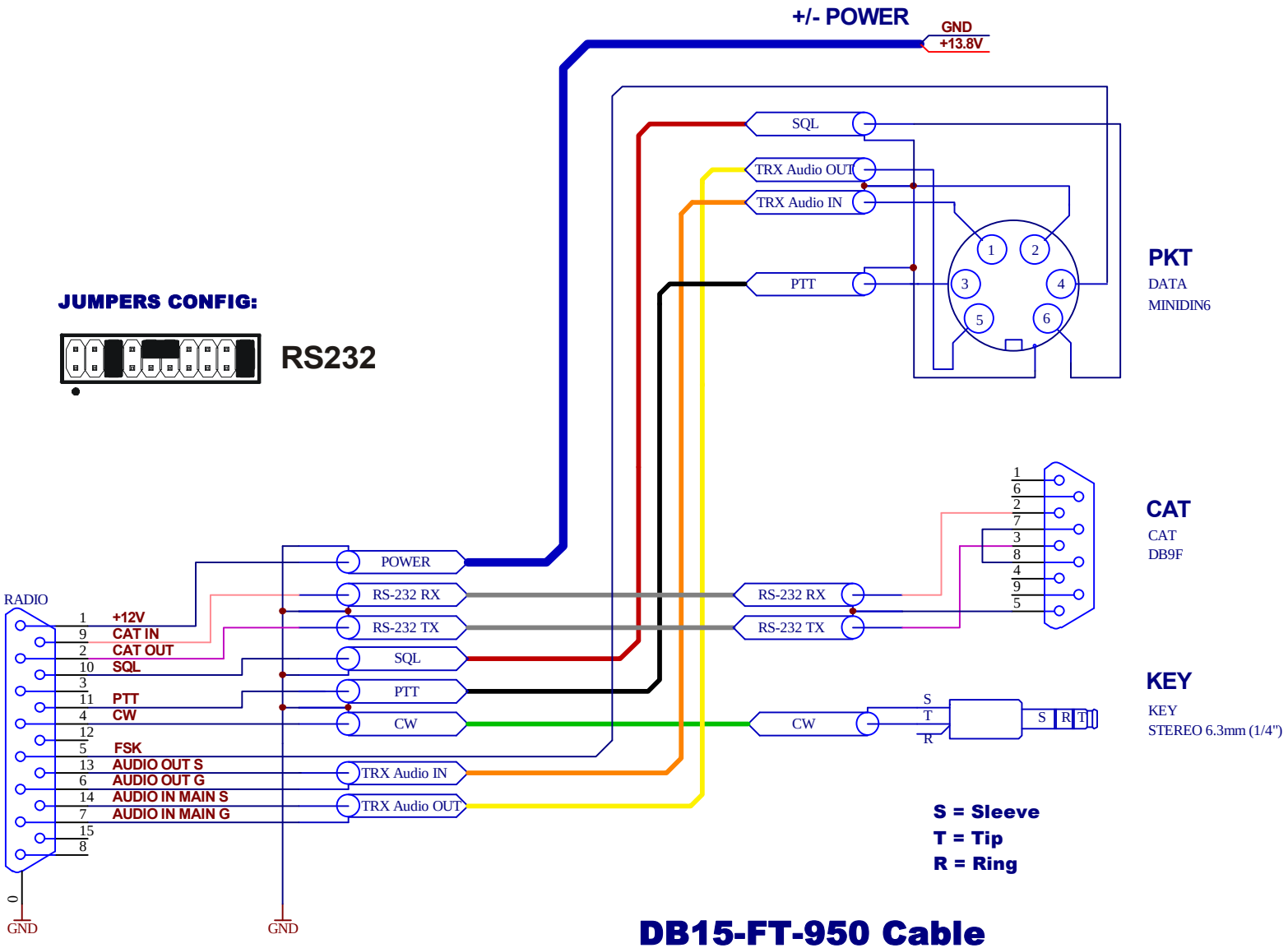

S = Sleeve
T = Tip
R = Ring

DB15-FT-950 Cable

FT-950