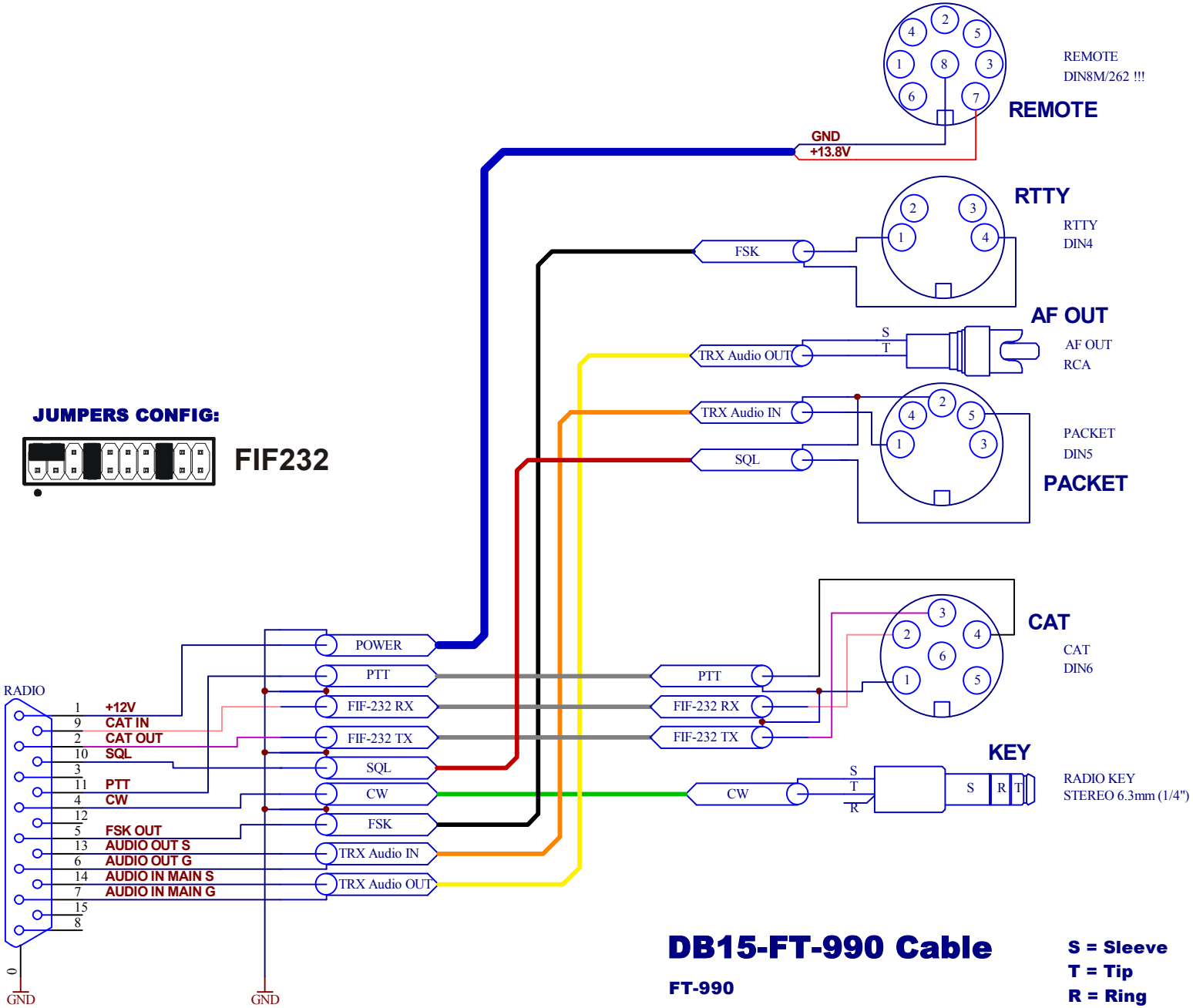
REMOTE
DIN8M/262 !!!
REMOTE
GND
+13.8V
RTTY
RTTY
DIN4
FSK
AF OUT
S
T
TRX Audio OUT
AF OUT
RCA
TRX Audio IN
SQL
PACKET
DIN5
PACKET
JUMPERS CONFIG:
FIF232
CAT
CAT
DIN6
POWER
PTT
FIF-232 RX
FIF-232 TX
SQL
CW
FSK
TRX Audio IN
TRX Audio OUT
PTT
FIF-232 RX
FIF-232 TX
KEY
S
T
R
CW
S
R
T
RADIO KEY
STEREO 6.3mm (1/4")
RADIO
1 +12V
9 CAT IN
2 CAT OUT
10 SQL
3
11 PTT
4 CW
12
5 FSK OUT
13 AUDIO OUT S
6 AUDIO OUT G
14 AUDIO IN MAIN S
7 AUDIO IN MAIN G
15
8
GND
GND
DB15-FT-990 Cable
FT-990
S = Sleeve
T = Tip
R = Ring