DB37-FT-920 Cable

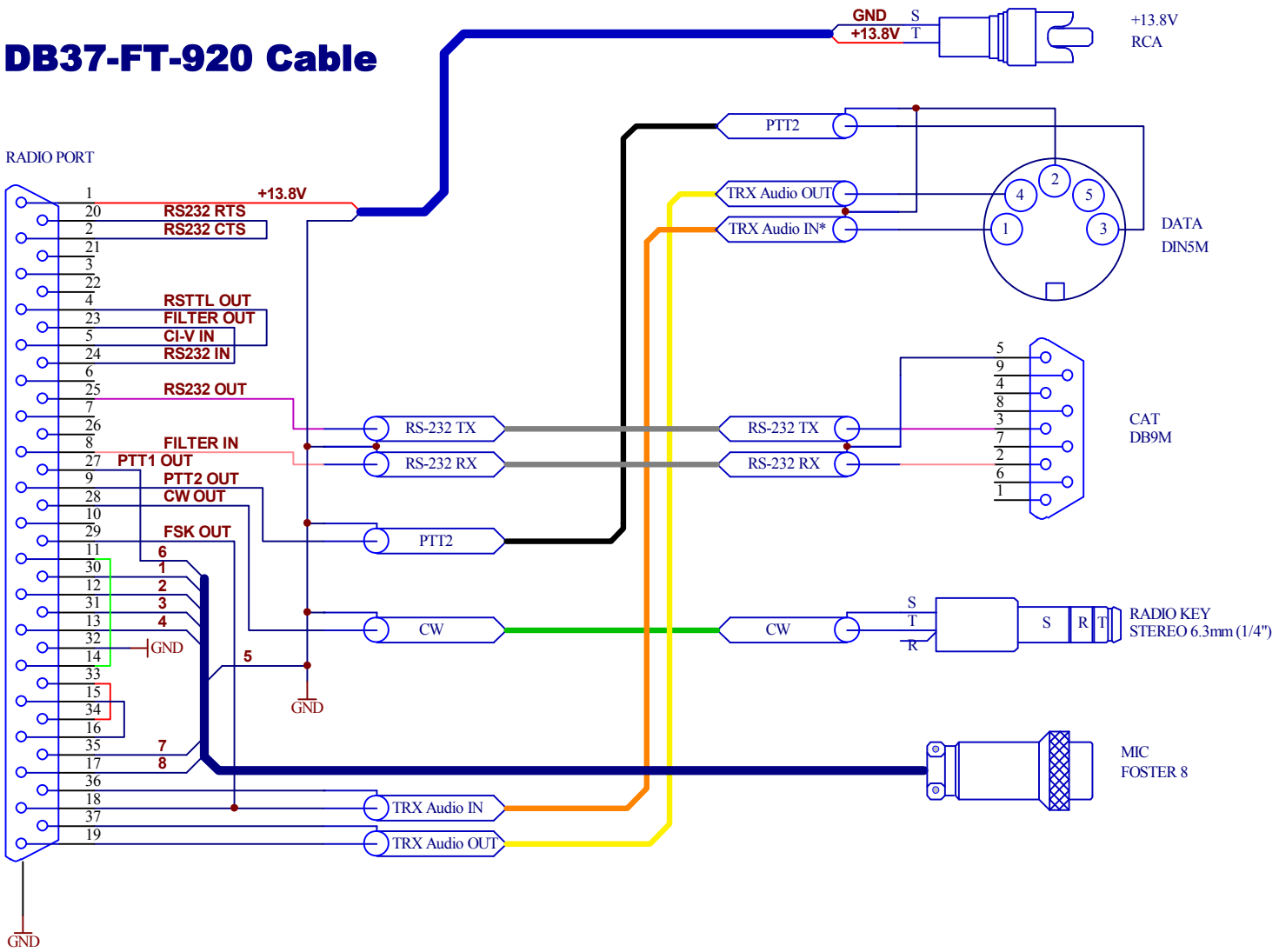

FT-920

Notes:

*** line contain AFSK and FSK signals from KEYER.**

S = Sleeve
T = Tip
R = Ring